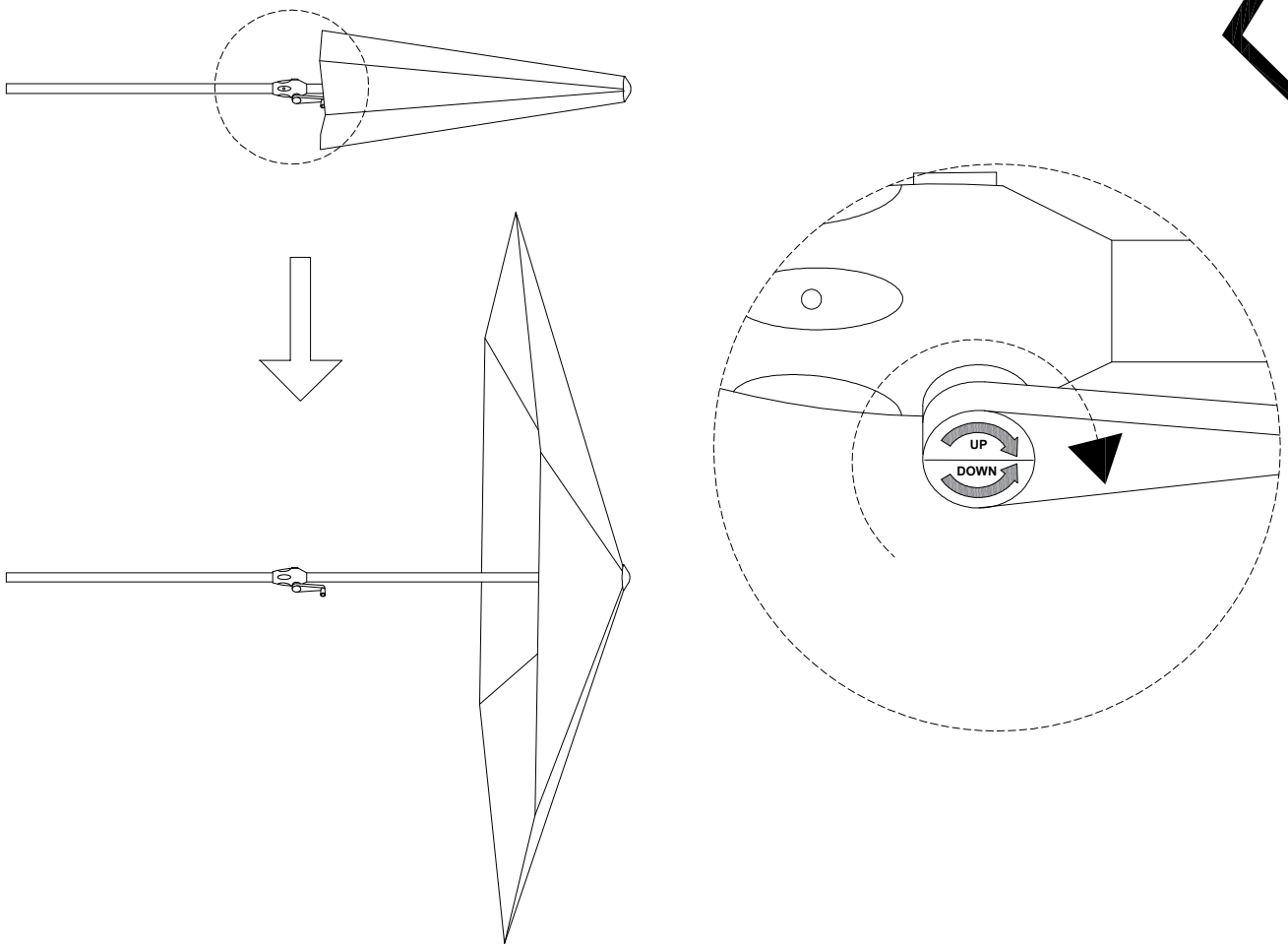
UP
DOWN

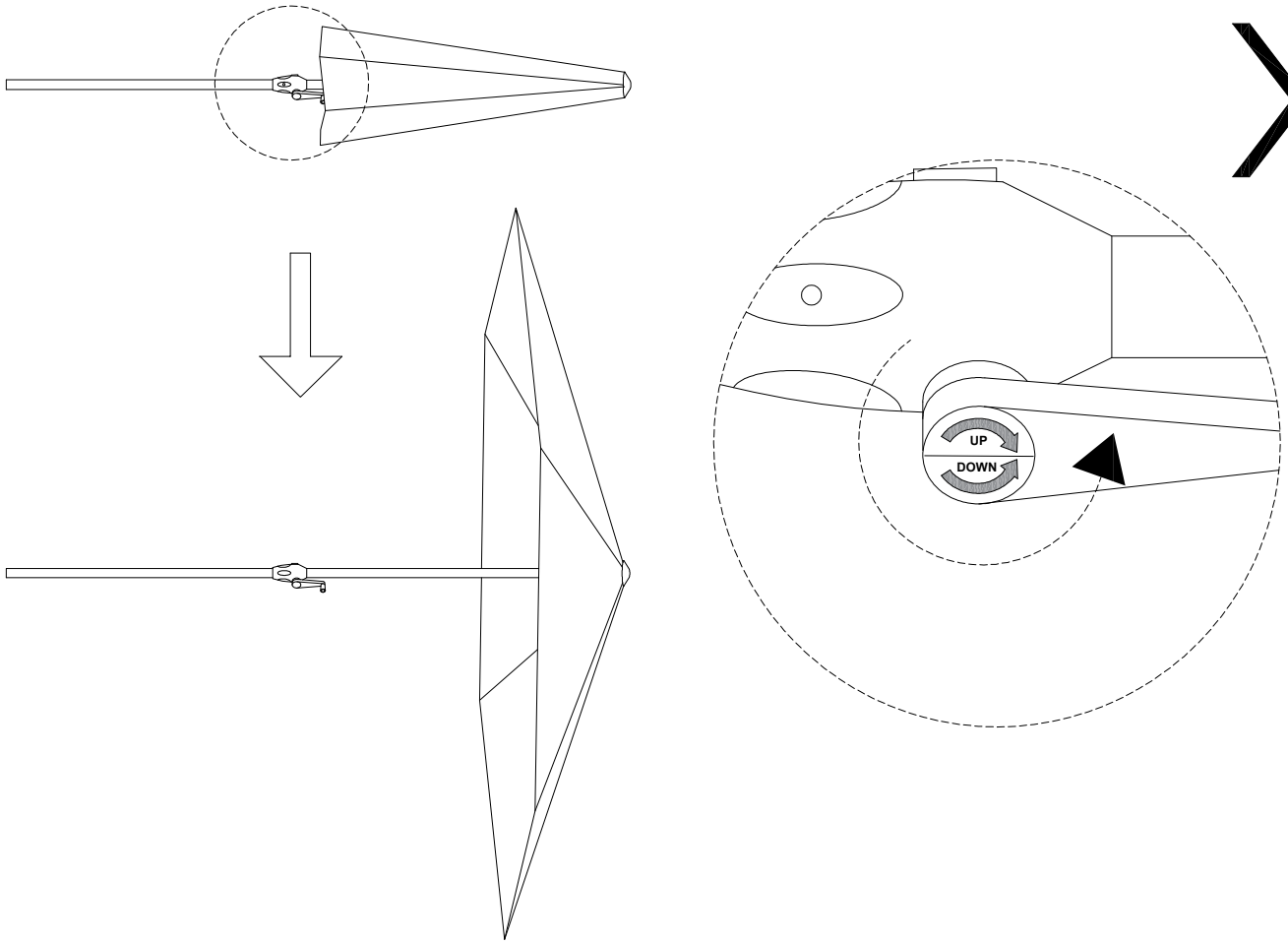
UP
DOWN